HKUST CIVL 1100 assignment I.2 submission

CIVL 1100 Discovering Civil and Environmental Engineering

Assignment I-2: Civil and Structural Engineering II

- Assigned: 27 February 2024 (Tue)
- Due date: 5 March 2024 (Tue) 11:59 pm

1. NOTE 1. Submit your completed assignment online to Canvas. Submit your work in a PDF file. Late submission will not be accepted.
2. NOTE 2. Show your work with steps clearly. When appropriate, illustrate your work with diagrams and/or figures and write down any assumptions you made.
3. NOTE 3. Use the sign conventions taught in lectures. Take g = 9.81 m/s^2 when necessary.

2.1

Use the method of joints to determine the axial forces in all members of the truss structure in Fig. 2.1, under the two applied loads as shown.

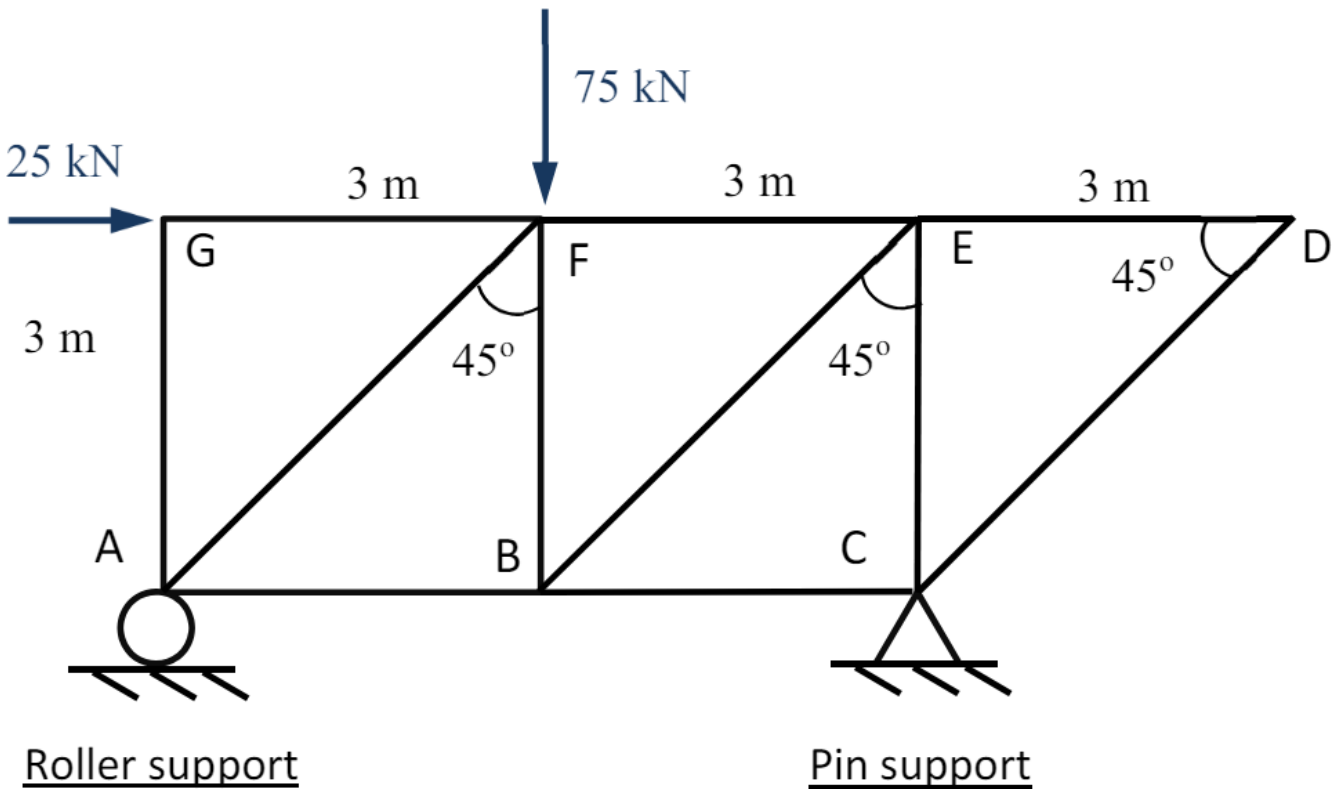

Fig. 2.1

At the end of calculation, summarize the forces in the members in a table like this one:

Member	Force (kN)	Member	Force (kN)
AB		*AG*	

Member	Force (kN)	Member	Force (kN)
BC		*AF*	
CD		*BF*	
DE		*BE*	
EF		*CE*	
FG			

Take up for vertical forces, right for horizontal forces, counterclockwise for moments, and tension as positive. Take down for vertical forces, left for horizontal forces, clockwise for moments, and compression as negative.

Let $A = (0\,\mathrm{N}, A_y)$ be the reaction at the roller support. Let $C = (C_x, C_y)$ be the reaction at the pin support. Let τ_A be the moment about the roller support. Let T_{XY} be the tensile force between joint X and Y.

Treating the truss structure as a rigid body:

$$\begin{aligned} F_{\mathrm{net},x} &= 25\,000 + C_x \\ 0 &= 25\,000 + C_x \\ C_x &= -25\,000\,\mathrm{N} \end{aligned}$$

$$\begin{aligned} \tau_A &= -3(25\,000) - 3(75\,000) + 6C_y \\ 0 &= -300\,000 + 6C_y \\ C_y &= 50\,000\,\mathrm{N} \end{aligned}$$

$$\begin{aligned} F_{\mathrm{net},y} &= -75\,000 + A_y + C_y \\ 0 &= -75\,000 + A_y + 50\,000 \\ A_y &= 25\,000\,\mathrm{N} \end{aligned}$$

$$(A_y, C_x, C_y) = (25\,000\,\mathrm{N}, -25\,000\,\mathrm{N}, 50\,000\,\mathrm{N})$$

Assume forces in all members are tension, so take tension as positive. Now we draw a table of known and unknown forces of each joint:

forces\joints	A	B	C	D	E	F	G
known	1	0	2	0	0	1	1
unknown	3	4	3	2	4	4	2

Solve for forces in the joints with 2 or less unknown forces, and then solve for forces in the new joints with 2 or less unknown forces, and so forth, until all forces in all joints are determined:

For joint D

$$\begin{aligned}
(F_{\text{net},x}, F_{\text{net},y}) &= (-F_{DE} - F_{CD}\cos 45^\circ, -F_{CD}\sin 45^\circ) \\
(0,0) &= (-F_{DE} - F_{CD}\cos 45^\circ, -F_{CD}\sin 45^\circ) \\
(0, F_{CD}) &= (-F_{DE} - F_{CD}\cos 45^\circ, 0) \\
&= (-F_{DE}, 0) \\
(F_{DE}, F_{CD}) &= (0\text{ N}, 0\text{ N}) \\
&= (0\text{ kN}, 0\text{ kN})
\end{aligned}$$

For joint C

$$\begin{aligned}
(F_{\text{net},x}, F_{\text{net},y}) &= (C_x - F_{BC} + F_{CD}\cos 45^\circ, C_y + F_{CE} + F_{CD}\sin 45^\circ) \\
(0,0) &= (-25\,000 - F_{BC}, 50\,000 + F_{CE}) \\
(F_{BC}, F_{CE}) &= (-25\,000\text{ N}, -50\,000\text{ N}) \\
&= (-25\text{ kN}, -50\text{ kN})
\end{aligned}$$

For joint E

$$\begin{aligned}
(F_{\text{net},x}, F_{\text{net},y}) &= (-F_{EF} - F_{BE}\cos 45^\circ + F_{DE}, -F_{BE}\sin 45^\circ - F_{CE}) \\
(0,0) &= (-F_{EF} - F_{BE}\cos 45^\circ, -F_{BE}\sin 45^\circ + 50\,000) \\
(0, F_{BE}) &= (-F_{EF} - F_{BE}\cos 45^\circ, 50\,000\sqrt{2}) \\
&= (-F_{EF} - 50\,000, 50\,000\sqrt{2}) \\
(F_{EF}, F_{BE}) &= (-50\,000\text{ N}, 50\,000\sqrt{2}\text{ N}) \\
&\approx (-50\text{ kN}, 70.7\text{ kN})
\end{aligned}$$

For joint B

$$\begin{aligned}
(F_{\text{net},x}, F_{\text{net},y}) &= (-F_{AB} + F_{BE}\cos 45^\circ + F_{BC}, F_{BF} + F_{BE}\sin 45^\circ) \\
(0,0) &= (-F_{AB} + 50\,000 - 25\,000, F_{BF} + 50\,000) \\
(F_{AB}, F_{BF}) &= (25\,000\text{ N}, -50\,000\text{ N}) \\
&= (25\text{ kN}, -50\text{ kN})
\end{aligned}$$

For joint F

$$\begin{aligned}
(F_{\text{net},x}, F_{\text{net},y}) &= (-F_{FG} - F_{AF}\cos 45^\circ + F_{EF}, -75\,000 - F_{AF}\sin 45^\circ - F_{BF}) \\
(0,0) &= (-F_{FG} - F_{AF}\cos 45^\circ - 50\,000, -75\,000 - F_{AF}\sin 45^\circ + 50\,000) \\
(0, F_{AF}) &= (-F_{FG} - F_{AF}\cos 45^\circ - 50\,000, -25\,000\sqrt{2}) \\
&= (-F_{FG} + 25\,000 - 50\,000, -25\,000\sqrt{2}) \\
(F_{FG}, F_{AF}) &= (-25\,000\text{ N}, -25\,000\sqrt{2}\text{ N}) \\
&\approx (-25\text{ kN}, -35.4\text{ kN})
\end{aligned}$$

For joint A

$$\begin{aligned}
(F_{\text{net},x}, F_{\text{net},y}) &= (F_{AF}\cos 45^\circ + F_{AB}, A_y + F_{AG} + F_{AF}\sin 45^\circ) \\
(0,0) &= (-25\,000 + 25\,000, 25\,000 + F_{AG} - 25\,000) \\
(0, F_{AG}) &= (0,0) \\
F_{AG} &= 0\text{ N} \\
&= 0\text{ kN}
\end{aligned}$$

For joint G as validation

$$\begin{aligned}
(F_{\text{net},x}, F_{\text{net},y}) &= (25\,000 + F_{FG}, -F_{AG}) \\
&= (25\,000 - 25\,000, 0) \\
&= (0\text{ N}, 0\text{ N})
\end{aligned}$$

Hence the table of forces, with tension in the members as positive:

Member	**Force (kN)**	**Member**	**Force (kN)**
AB	25	*AG*	0
BC	-25	*AF*	-35.4

Member	Force (kN)	Member	Force (kN)
CD	0	*BF*	-50
DE	0	*BE*	70.7
EF	-50	*CE*	-50
FG	-25		

2.2

Determine all support reactions for the three-hinged arch shown in Fig. 2.2.

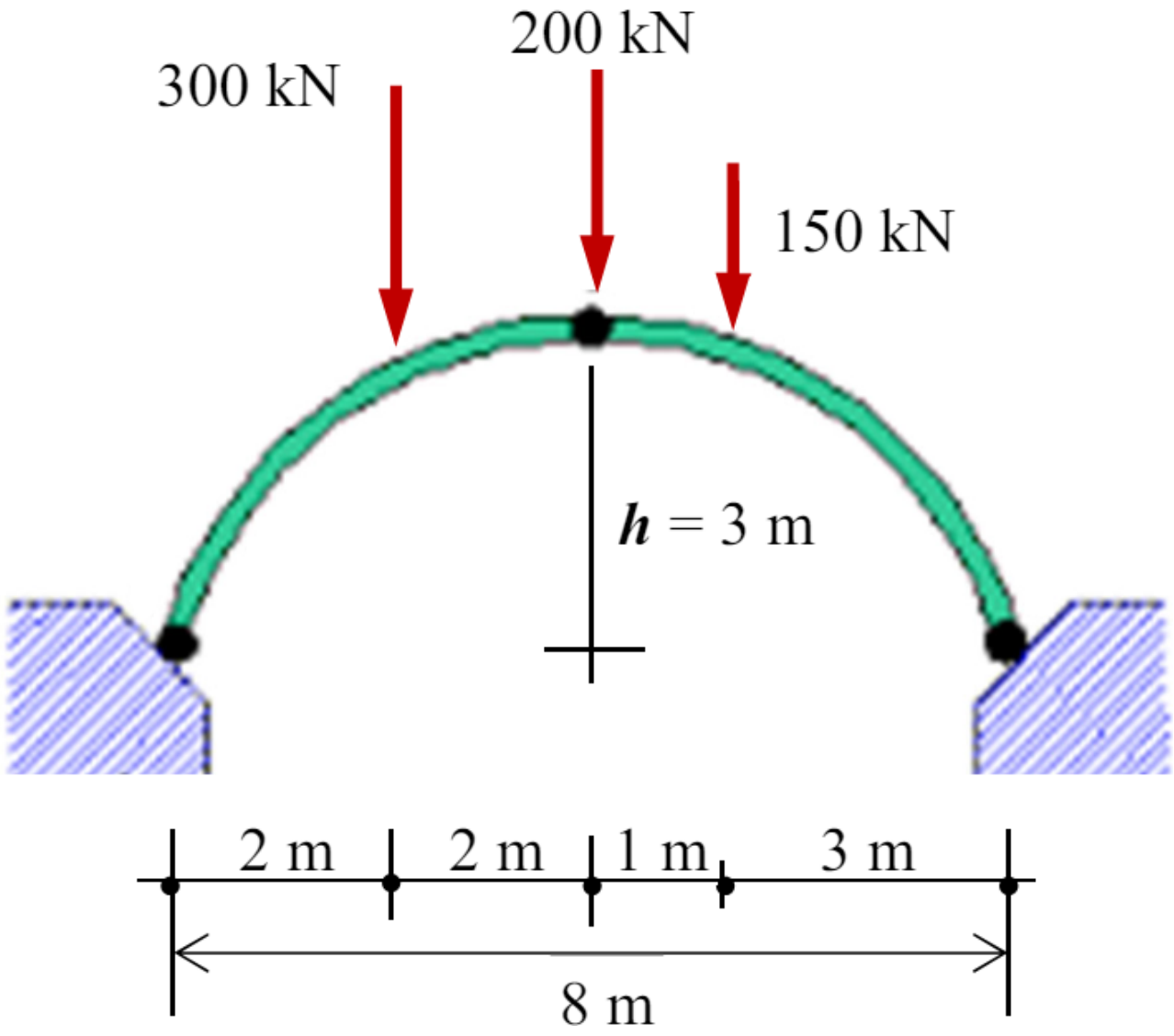

Fig. 2.2

> Take up for vertical forces, right for horizontal forces, counterclockwise for moments, and tension as positive. Take down for vertical forces, left for horizontal forces, clockwise for moments, and compression as negative.
>
> Let $L = (L_x, L_y)$ and τ_L respectively be the reaction and moment at the left hinge. Let $R = (R_x, R_y)$ and τ_R respectively be the reaction and moment at the right hinge. Let τ_M be the moment at the middle hinge.

Now, find the vertical reactions at the left and right support by considering the entire arch as a rigid body:

$$\begin{aligned}
\tau_L &= -2(300\,000) - 4(200\,000) - 5(150\,000) + 8R_y \\
0 &= -2\,150\,000 + 8R_y \\
R_y &= 268\,750 \text{ N}
\end{aligned}$$

$$\begin{aligned}
\tau_R &= -8L_y + 6(300\,000) + 4(200\,000) + 3(150\,000) \\
0 &= -8L_y + 3\,050\,000 \\
L_y &= 381\,250 \text{ N}
\end{aligned}$$

Now, find the horizontal reactions at the left and right support by consider the left arch and the right arch separaetly as two rigid bodies:

$$\begin{aligned}
&\text{Consider the left arch as a rigid body} \\
\tau_M &= 2(300\,000) - 4L_y + 3L_x \\
0 &= 600\,000 - 1\,525\,000 + 3L_x \\
L_x &= \frac{925\,000}{3} \text{ N} \\
&= 308\,333 \text{ N (cor. to 6 sig. fig.)}
\end{aligned}$$

$$\begin{aligned}
&\text{Consider the right arch as a rigid body} \\
\tau_M &= -1(150\,000) + 4R_y + 3R_x \\
0 &= -150\,000 + 1\,075\,000 + 3R_x \\
R_x &= -\frac{925\,000}{3} \text{ N} \\
&= -308\,333 \text{ N (cor. to 6 sig. fig.)}
\end{aligned}$$

We can validate the answer by checking whether the net force for the entire arch is zero:

$$\begin{aligned}
(F_{\text{net},x}, F_{\text{net},y}) &= \left(\frac{925\,000}{3} - \frac{925\,000}{3}, 268\,750 + 381\,250 - 300\,000 - 200\,000 - 150\,000\right) \\
&= (0 \text{ N}, 0 \text{ N})
\end{aligned}$$

Hence, the answer is:

$$(L_x, L_y, R_x, R_y) = (308\,333 \text{ N (cor. to 6 sig. fig.)}, 381\,250 \text{ N}, -308\,333 \text{ N (cor. to 6 sig. fig.)}, 268\,750 \text{ N})$$